DUCTILE IRON FLANGE END PN16 Y STRAINER

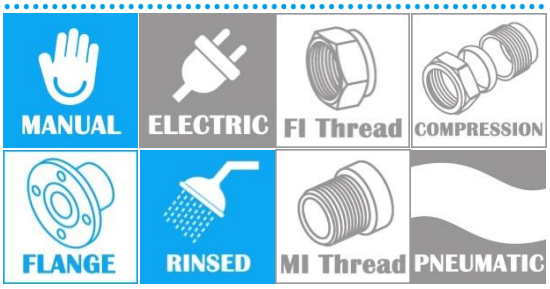

COMPLY WITH BS EN 1092-2:1997
AS/NZS 4020:2005
BS EN 545:2010
SS 270:2015
SS 375:2001 & SS 375:2015

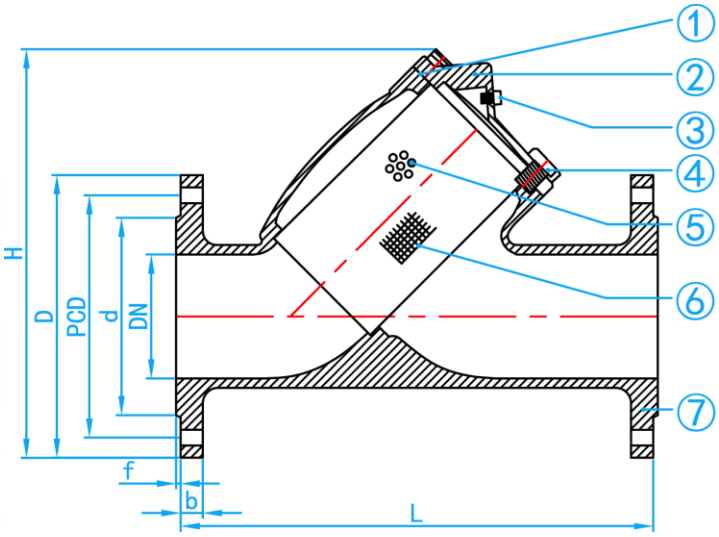

CROSS SECTIONAL VIEW

STANDARD SPECIFICATIONS	
Nominal Pressure	PN16
Flange Standard	BS4504
Working Temperature	-20~80℃

STANDARD SCREENS		
Size	Hole Dia (mm)	Free Flow Area
DN80	1.5	33%
DN100-300	3.0	33%

COMPONENT PARTS		
ITEM	PARTS	MATERIAL
1	Gasket	EPDM
2	Cover	Ductile Iron
3	Plug	AISI304
4	Bolts	Steel 8.8
5	Filter Core	AISI304
6	Filter Screen	AISI304
7	Body	Ductile Iron

DIMENSIONS

SKU	DN (mm)	L (mm)	H (mm)	d (mm)	D (mm)	PCD (mm)	n-d (mm)	f (mm)	b (mm)	WEIGHT (kg)
YSDIN080	80	290	310	132	200	160	8-19	3	19	13.2
YSDIN100	100	350	360	156	220	180	8-19	3	19	17.5
YSDIN150	150	440	550	211	285	240	8-23	3	19	42.0
YSDIN200	200	540	620	266	340	295	12-23	3	20	65.0
YSDIN250	250	660	700	319	405	355	12-28	3	22	91.0
YSDIN300	300	720	800	370	460	410	12-28	4	24.5	120.0

Copyright. All Rights Reserve. Norika®
Norika is constantly seeking product improvements. Therefore, its products are subject to change if deemed necessary.